Afix™

TAPERED FUNNEL

MOLAR TUBES

by Modern Orthodontics

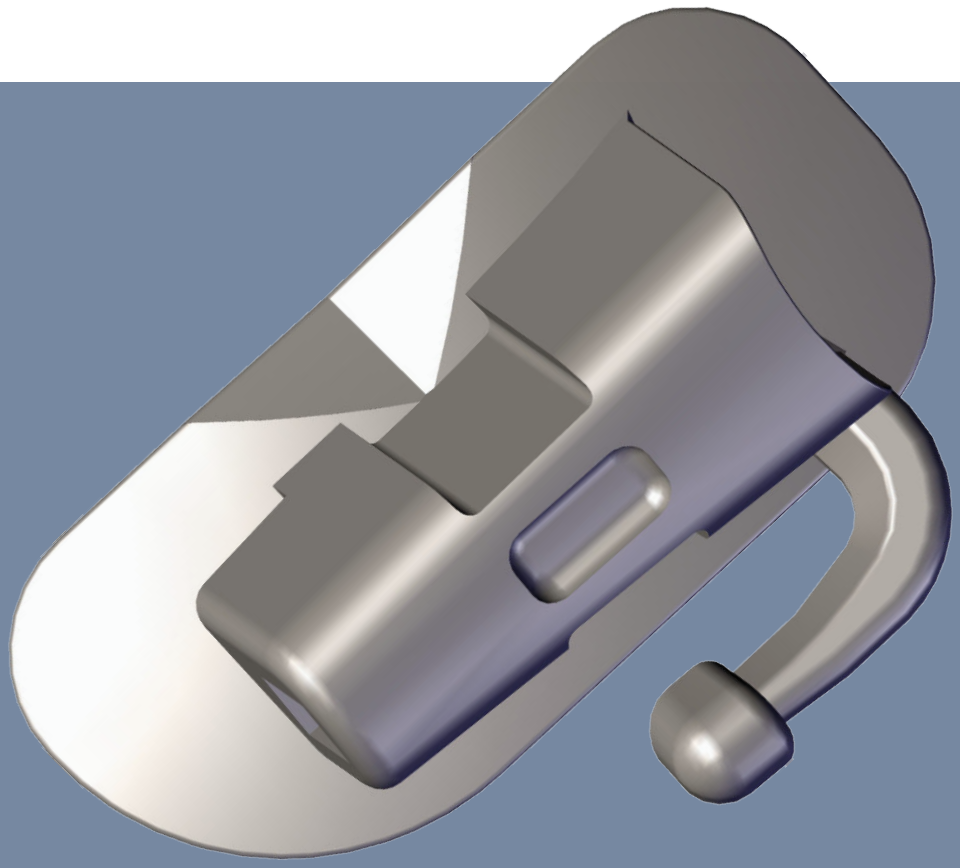

- Lowest Profile
- Funnel Entry
- Metal Injection Molded
- Comfort Hooks

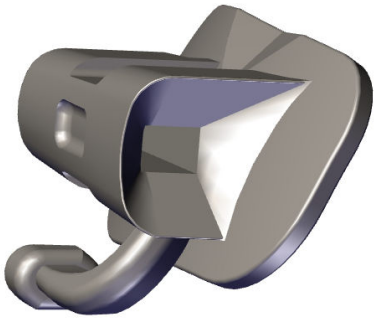

Modern Orthodontics



Afix™
TAPERED FUNNEL
MOLAR TUBES

Chamfered entry for easier wire insertion

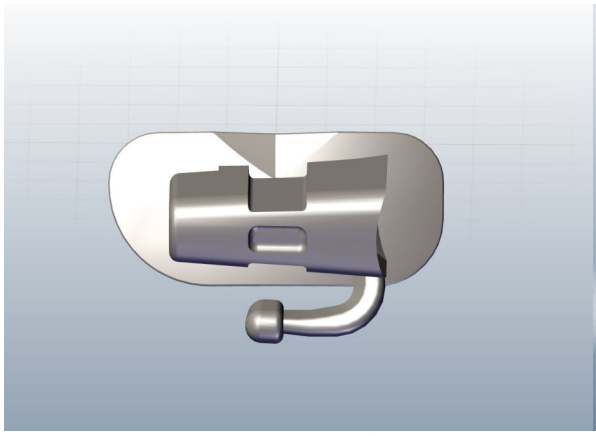

Comfort design ball hooks

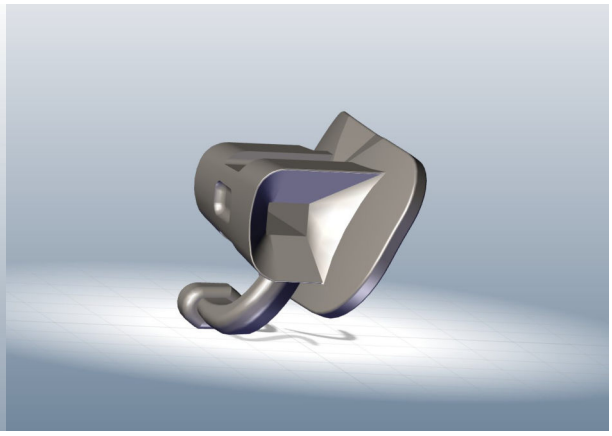

Lowest Profile Design to avoid occlusal interferences and for best in-out values

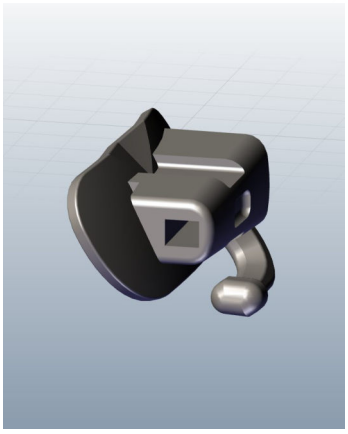

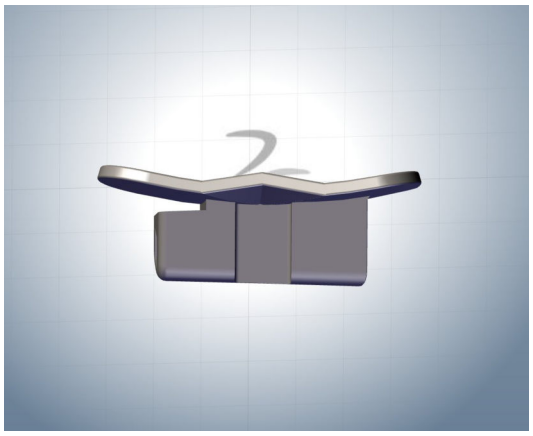

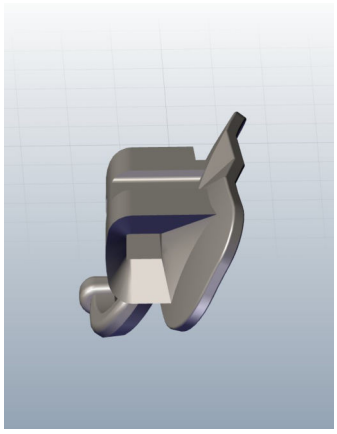

Allows secure holding during bonding with any regular fine tip bonding tweezers

Distal Notch for engagement of elastomerics or ligatures

80G Mesh pad with proven bonding strength and buccal notch



Afix™
TAPERED FUNNEL
MOLAR TUBES

Upper single 1st molar tubes

Slot Torque	Prescription	Slot Size	Bondable Left	Bondable Right
-10°	Roth	.018″	MA-8B-S03	MA-8B-S02
-10°	Roth	.022″	MA-2B-S03	MA-2B-S02
-14°	MBT	.018″	MA-8B-S05	MA-8B-S04
-14°	MBT	.022″	MA-2B-S05	MA-2B-S04

Upper single 2nd molar tubes

Slot Torque	Prescription	Slot Size	Bondable Left	Bondable Right
-10°	Roth	.018″	MA-8B-S23	MA-8B-S22
-10°	Roth	.022″	MA-2B-S23	MA-2B-S22
-14°	MBT	.018″	MA-8B-S25	MA-8B-S24
-14°	MBT	.022″	MA-2B-S25	MA-2B-S24

Lower single 1st molar tubes

Slot Torque	Prescription	Slot Size	Bondable Left	Bondable Right
-25°	Roth	.018″	MA-8B-S07	MA-8B-S06
-25°	Roth	.022″	MA-2B-S07	MA-2B-S06
-20°	MBT	.018″	MA-8B-S09	MA-8B-S08
-20°	MBT	.022″	MA-2B-S09	MA-2B-S08

Lower single 2nd molar tubes

Slot Torque	Prescription	Slot Size	Bondable Left	Bondable Right
-25°	Roth	.018″	MA-8B-S27	MA-8B-S26
-25°	Roth	.022″	MA-2B-S27	MA-2B-S26
-10°	MBT	.018″	MA-8B-S29	MA-8B-S28
-10°	MBT	.022″	MA-2B-S29	MA-2B-S28

5 patient pack 1st molar tubes

Prescription	Slot Size	Bondable Upper	Bondable Lower	Cat. No.
Roth	.018″	Single	Single	MA-8B-K01
Roth	.022″	Single	Single	MA-2B-K01
MBT	.018″	Single	Single	MA-8B-K11
MBT	.022″	Single	Single	MA-2B-K11

5 patient pack 2nd molar tubes

Prescription	Slot Size	Bondable Upper	Bondable Lower	Cat. No.
Roth	.018″	Single	Single	MA-8B-K21
Roth	.022″	Single	Single	MA-2B-K21
MBT	.018″	Single	Single	MA-8B-K22
MBT	.022″	Single	Single	MA-2B-K22



© Modern Orthodontics
Doc#MO/CTG/F01 Issue #1 Rev.00 Dated 25/07/16

Modern Orthodontics